Instructions for assembly, operation and maintenance of indoor disconnectors and earthing switches

with motor operated drives VM10 and VM50
single- and more-pole design
rated voltage 12, 25 and 38.5 kV
rated current 630 – 6300 A

DRIBO, spol. s r.o.

Pražákova 36
619 00 Brno
Czech Republic

Tel.: +420 533 101 111, **Fax:** +420 543 216 619, **E-mail:** dribo@dribo.cz, **Internet:** http://www.dribo.eu

Indoor disconnectors and earthing switches

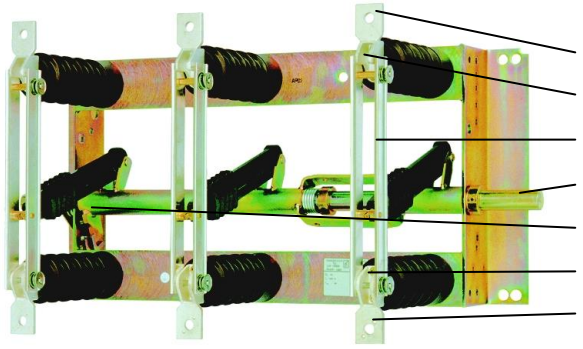

Indoor Disconnector

1 Upper connection
2 Contact jaw
3 Main circuit
4 Actuator shaft
5 Stop of operating shaft
6 Pivot contact
7 Lower connection

5,11 Side view

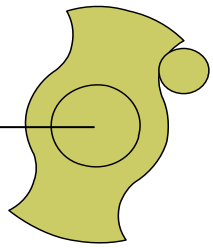

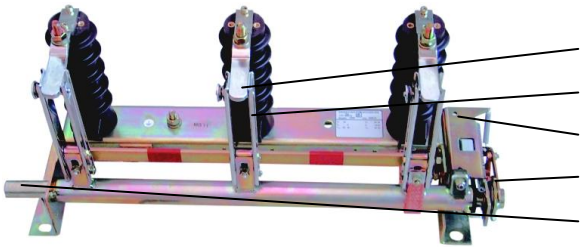

Earthing Switch

8 Contact jaw
9 Main circuit
10 Driving mechanism
11 Stop of operating shaft
12 Actuator shaft

Handling and storage

Unpack the disconnector upon arrival. Check for damages caused during the transport. Any damage should be reported immediately to the supplier. After unpacking remove all remaining packaging material from the switching device and accessories.

Lift the disconnector by holding it at the base frame, only. Use never the current-carrying path as a component for lifting up the switching device. During the storage protect the device from damages, humidity and dirt.

Operating conditions

The disconnector is intended for operation under normal conditions as defined by the EN 62271-1 standard, class „minus 15, indoor use“. Highest ambient temperature: 40°C; average temperature during 24 hours is not allowed to exceed 35 °C.

Assembly

The switching devices are designed for vertical mounting. Devices for horizontal mounting are modified and identified accordingly.

Assembly of the disconnector
Screws are to be tightened up in a way to prevent the occurrence of deformation or stress in the disconnector base frame (use shim blocks if needed).

Connection of busbars or cable terminals
When making connections take care of incoming terminals of the disconnector (1,7) which have to be kept away from stresses. Fix the connecting bolts with 70 Nm torque (using another key in opposite position).

Putting the blocking system into operation
In order to reduce the probability of damage to the switching knife contacts both the disconnectors and the earthing switches are transported in ON switching position. Consequently, the blocking system is not operative during the transport.
Prior putting the device into operation the blocking system is to be enabled. This is done using the following steps:

1. Switch the disconnector OFF.
2. Using a torque wrench tighten special cut-in M10x25 bolt in the blocking segment with a torque of 55 Nm.
3. Check the proper function of the blocking mechanism.

Operation test before putting the device in operation

Checking the end position of the disconnector and the earthing switch
In the course of handling with both the manual and motor operated drive the switching shaft (4) must abut against the end block (5). If the disconnector is equipped with earthing switch also the earthing switch shaft (12) must reach the end positions.

Checking the current-carrying path
The knife contacts (3) must approach the fixed contact in a symmetrical way.

Checking the blocking magnets
Switching of devices equipped with blocking magnets can take place only if voltage is connected to the magnet. In no-voltage state the switching device is blocked by magnet. The magnet is designed for 100 % of load capacity.

Connecting the blocking magnets to the power:

DC magnet

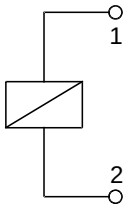

AC magnet with rectifier

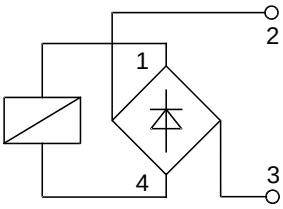

Connection and checking of the VM10 or VM50 motor operated drives
The connection of the VM10 and VM50 drives takes place using two cables fed into the drive´s input terminal block. The terminal block holder is adapted for fixing the cables with cable ties.

The MV10 and VM50 motor drives do not include the control electronics. The drives connection is to correspond with the hereunder shown wiring diagrams. The connection terminals are identified with the letter X on the diagrams. The drive mechanism is able to operate reliably within 85-110% of the rated control voltage.

The VM10 and VM50 motor operated drives are designed in a way to make it possible for the output lever to be moved within the range of 360°. During the connection of the motor operated drive and putting it into operation or reversing its polarity or incorrect connection of the end switches, no damage to the motor drive or the switching device may happen. Normally the lever of the motor drive is moving within the upper sector (farther from the frame). If the lever overshoots into the bottom sector (closer to the frame) due to incorrect connection of the drive, then the lever has to be put back into correct operating position. This can be done electrically, e.g. by bypassing the end switches. The lever in the VM10 drives may be put in correct working position also using manual emergency control mechanism. After having remedied the wiring of the drive we have to perform electrical tests and, following the final testing, we additionally connect the plate with end stops for manual emergency control to the VM10 motor operated drive – see picture below.

In case of need the VM10 and VM50 drives can also be controlled without the need of motion inversion of the drive when moving the switching device into ON or OFF switching position (recommended connection with one contactor is available on request. If this is the case then it is not necessary to use the plate with end stops for manual emergency control of the VM10 motor operated drive.

In case the motor operated drives are used to operate both the switching device and, simultaneously, an earthing switch, provisions have to be taken to ensure electrical interlocking. The built-in mechanical blocking is used only for emergency control. Starting the motor-operated drive into a condition in which the drive is mechanically blocked may cause damage to the drive.

Installation of the plate with end stops for manual emergency control of the VM10 motor drives; adjustment of the end stops
The plate with the end stops is installed only after a final test run of the drive has been performed. The plate is inserted below the nut which holds the switch disconnector fixed to the wall. During the insertion the stop screws are fully screwed in. Align the plate with the switch disconnector frame and retighten the nut. Secure the plate in this position to the frame with the pin delivered.

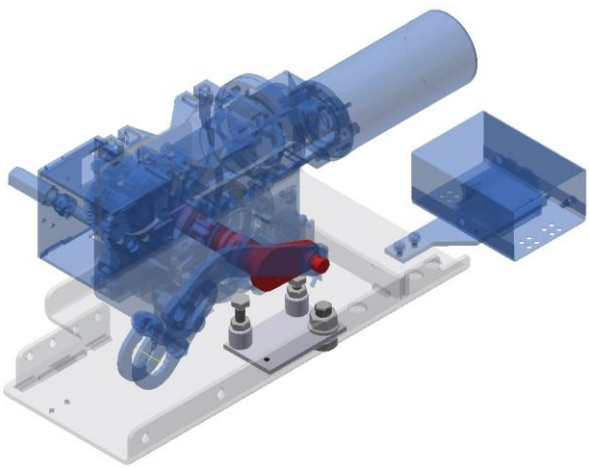

Put the motor drive electrically into ON switching position. Screw out the stop screw appurtenant to the ON position closer to the lever, while keeping a gap of up to 1 mm between the stop screw and the drive lever (since the appearance of stress is to be avoided when controlling the drive electrically between the lever and the end stop). Perform also the same steps for the OFF position.

Recommended wiring diagram of the VM10 and VM50 drives 24 ~ 220 V DC

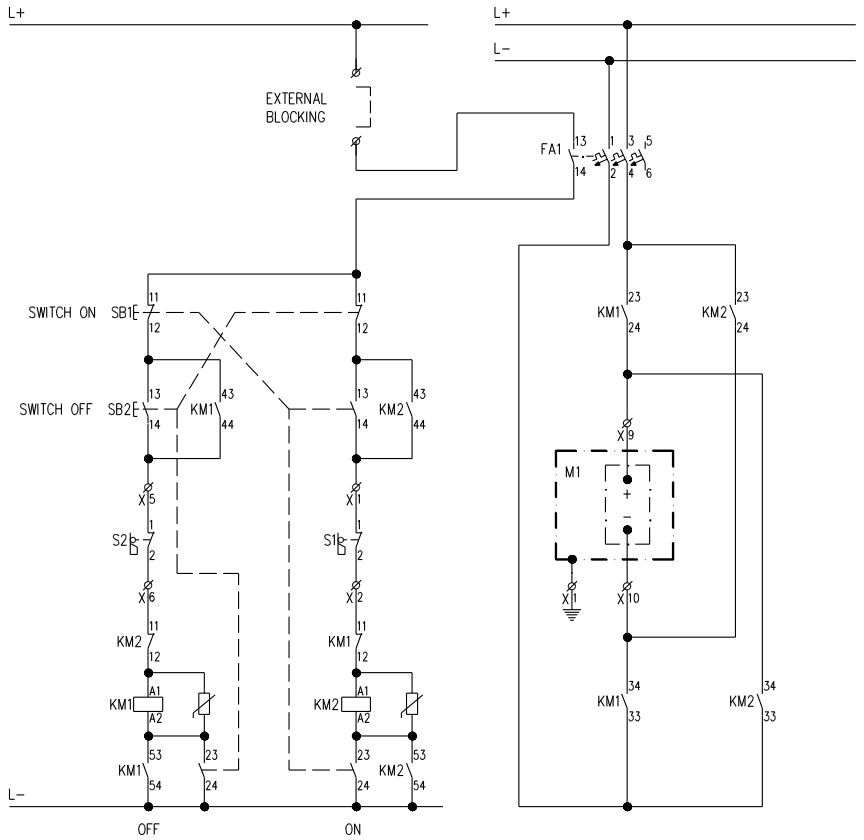

Recommended wiring diagram of the VM10 and VM50 24 drives 230 V AC (220 V DC motor + rectifier)

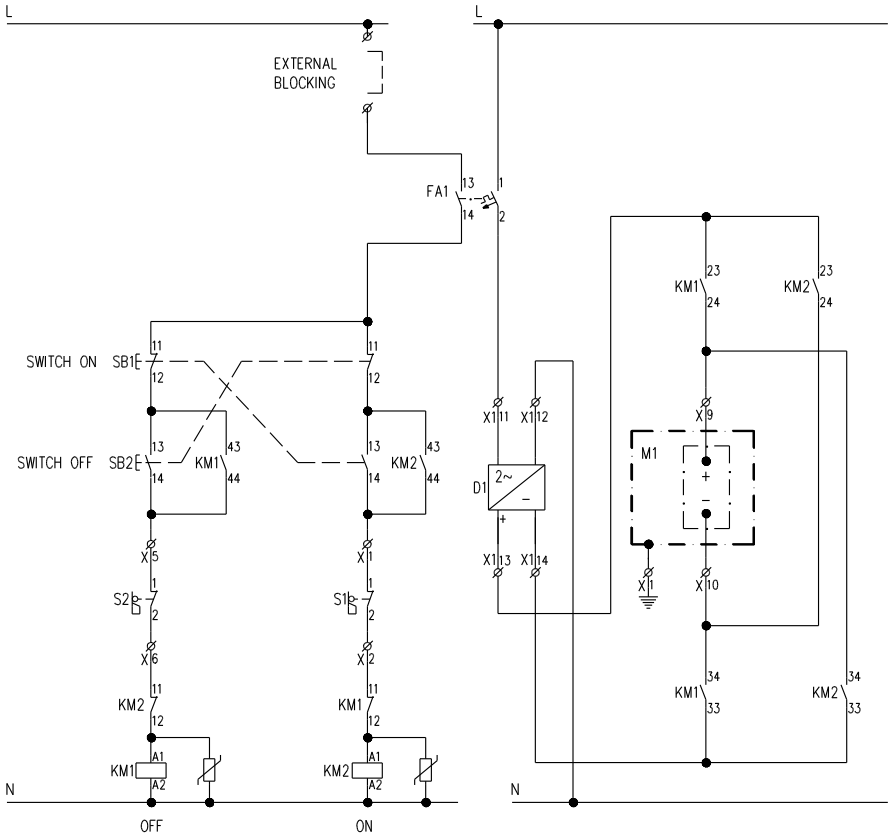

Recommended wiring diagram of the VM10 and VM50 24 drives 400 V AC

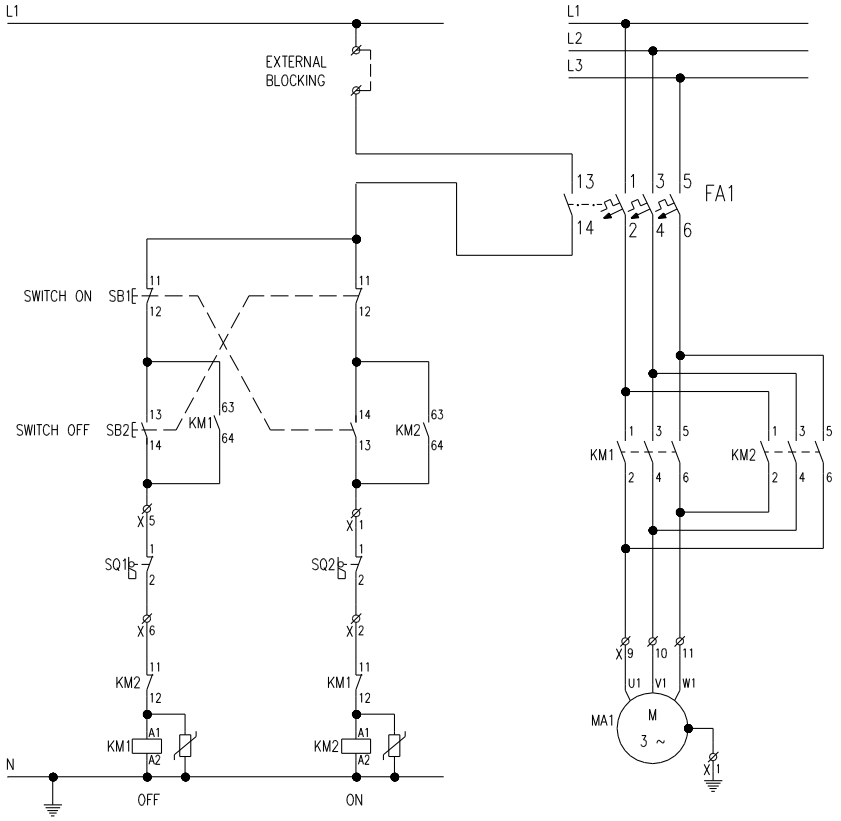

Protection of motor operated drives

VM10 and VM50 motor operated drives need for their protection circuit breakers with the M characteristics.

When operating the drives with 230V AC (220 V DC + rectifier), 400V AC and 24V DC supply control voltages it is recommended to use three-phase AC motor starters to start the drive.

Type	Manufacturer
GZ1 M	Schneider Electric
GV2-M	Telemecanique
PKZM0	Moeller
140M-C2E	Allen-Bradley
SM1-B	Lovato
SM1E	OEZ Letohrad
MIS	SEZ Krompachy

However, voltages of 110 V DC and 220 DC need to have circuit breakers capable of interrupting DC short-circuit current. For this purpose the following circuit breakers have been tested:

Type	Manufacturer
140-MN	Allen-Bradley
S 282 UC-K	ABB
RI 5 J2 M	SEZ Krompachy

The use of another types of circuit breakers, for 110 V DC and 220 V DC voltages, needs to be discussed with

the DRIBO company. Each such circuit breaker has to be completed with auxiliary contact that opens the control circuits in case it starts to operate.

When connecting the circuit breaker into power circuit recommendations of the manufacturer have to be adhered to, especially concerning the polarity.

Checking the auxiliary switches

The adjustment of auxiliary switches takes place at the manufacturer's, in accordance with the stipulations of standards, and has not be changed without the consent of the suppliers. Contact terminals of auxiliary switches are marked with numbers, depending on the sequence and type of contact:

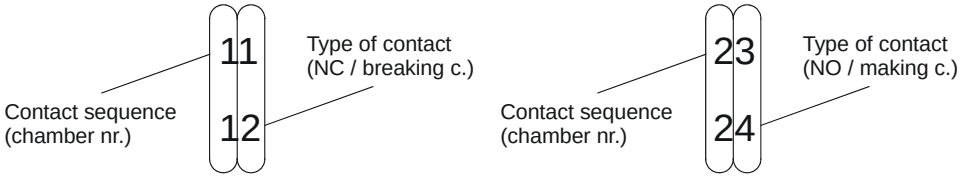

The numbering starts always from the shaft (see the following example of contact description). The first contact is a NC contact followed with NO contact. In such a way the contacts are alternating until the required number of one specific type of contact runs out. The remaining contacts of one specific type are grouped at the end. Switching devices are equipped with auxiliary switches containing always even number of contacts. Examples of description and the arrangement of contacts:

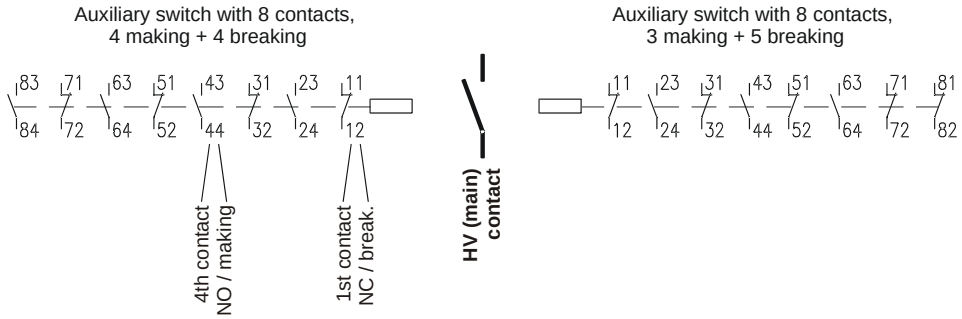

Operation

The VM10 drive mechanism has an output shaft left out from the gearbox, intended for manual control of the drive in emergency situations using a crank (insulated rotating rod with square shaft end). The ON switching position is achieved by turning the crank in clockwise direction, and vice versa. There is an electrical switch which interrupts the power to the drive when pushing the crank in the opening (as on option, on request). The contacts of the switch may be brought out onto the terminal block of the motor. The module of emergency manual control can be turned round by 90° around the output axis, if required. On request the drive may be equipped with an emergency manual control module which makes it possible to turn round the module in two different axes. Also on request the drive may be further equipped with an end piece for easier insertion of the rod or crank for emergency control. To the VM10 motor operated drive is delivered a plate with end stops for manual emergency control.

In emergency situations the VM50 drive can be controlled with a lug terminated lever mounted on the switch shaft, using an insulated rod. When operating the drive manually in emergency situations the manual control lever becomes mechanically disconnected from the motor operated drive mechanism. Therefore it is not possible to use NO contact of S1 and S2 end position switches for the device state signalization. For state signalisation purposes serves separate auxiliary switch. The manual control lever can be fixed to the shaft of the drive mechanism at any angular position, as required. If after an emergency switching the lever position of the switching device differs from that of the motor operated drive, it will be re-adjusted following other electrically operated handling, in which case the drive mechanism spontaneously links up with the manual emergency control lever.

VM10 – emergency manual control

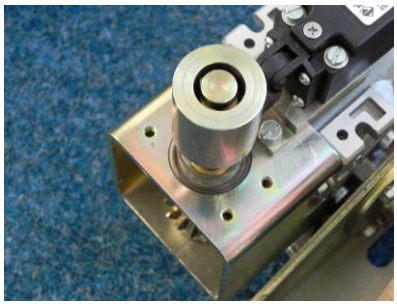

VM10 – optional end piece

VM50 – emergency manual control

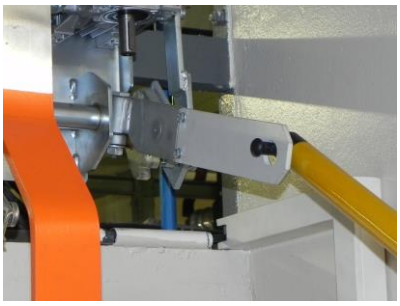

Maintenance

Under normal operating conditions maintenance works are to be carried out every 10 years. During the maintenance the following works are carried through:

Cleaning

- insulators
- insulated switching pull rod
- switching knife-type contacts (in OFF position)
- switching springs
- earthing contacts

Lubrication

- all bearings, friction lodgement and hinges (on mechanical parts of the base frame) shall be treated with oil applied by spraying (see table below)
- surfaces of the main contacts may be greased with specified greasing agent, only, with a very thin layer of grease applied
- after having been cleaned the earthing switch contacts are treated with grease

To be applied to	Lubricating means prescribed
main contact surfaces	disconnectors up to 630 A: Rivolta S.K.D. 4002 grease disconnectors 1250A – 6300A: Barrierta L55/1 grease
all bearings	Omnigliss spray or other spray containing Molykote
earthing switch contacts	Barrierta L55/1 grease

Make a few switching operations after the termination of maintenance works.